Included in the scope of delivery:

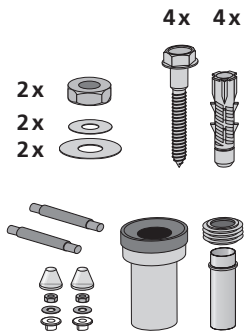

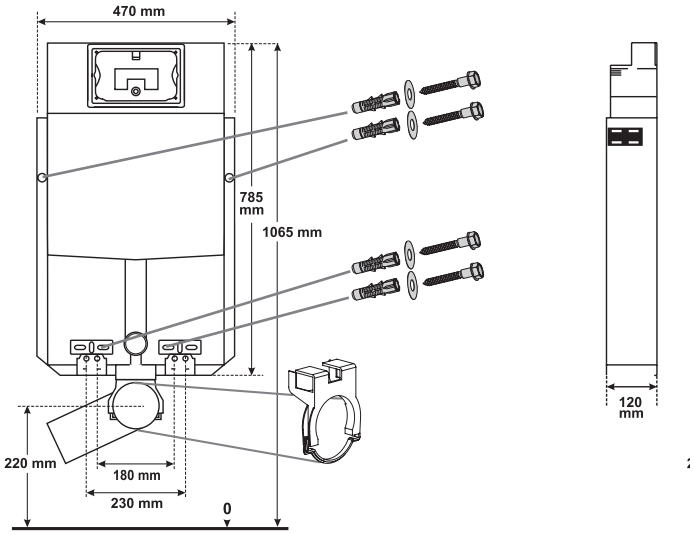

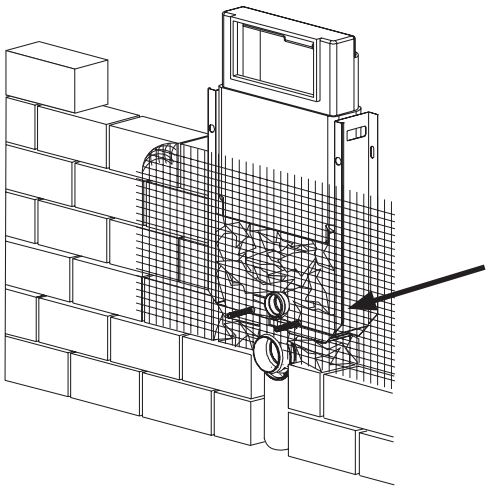

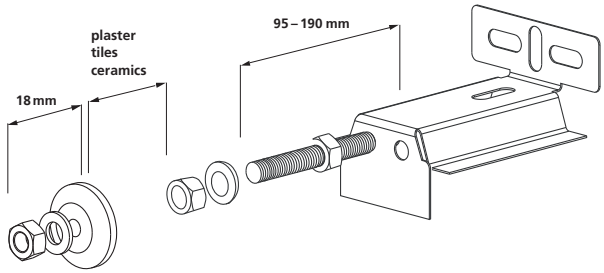

*After fitting the WC bolts,
lock them with the enclosed 12 mm nut

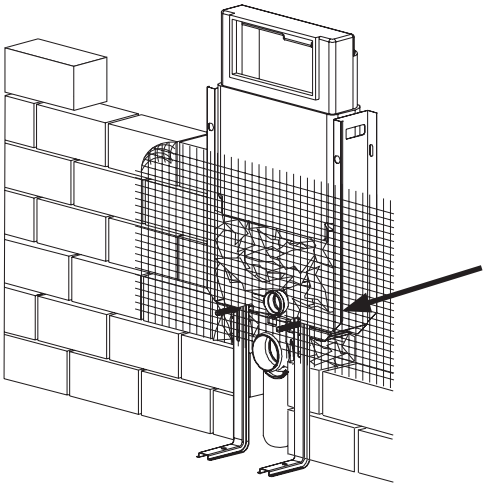

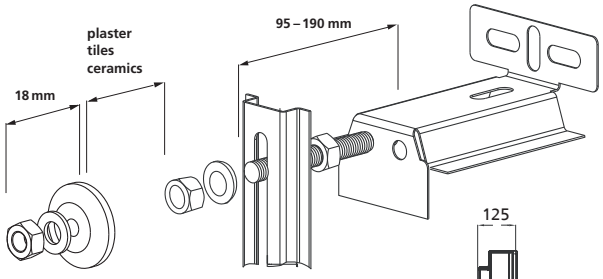

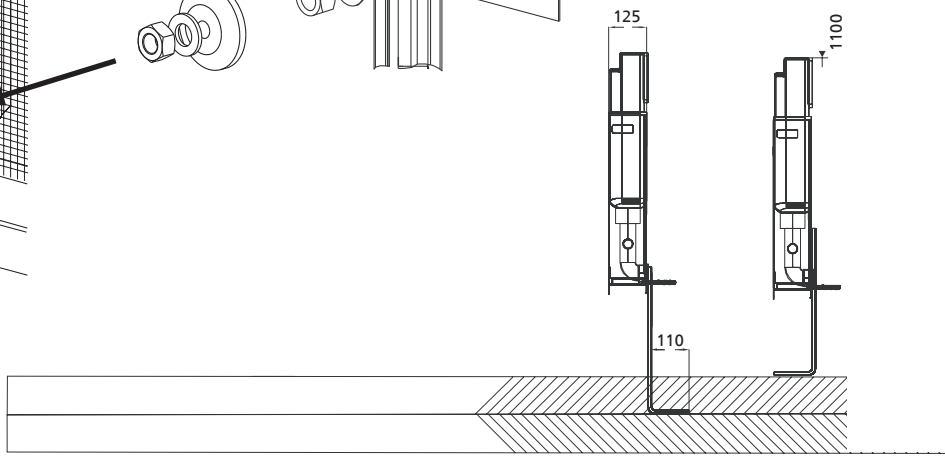

H. Burda GmbH
Krefelder Str. 87
40549 Düsseldorf

Tel. +49-(0)211-95001-0
Fax +49-(0)211-500 575
info@burda-online.com
www.burda-online.com

burda